Time domain envelope characterization of power amplifiers for linear and high efficiency design solutions

P. Medrel*, T. Reveyrand*, A. Martin*, Ph. Bouysse*, J.-M. Nébus*, J. Sombrin*
*XLIM - ∑LIM, 123 Avenue Albert Thomas, 87060 Limoges Cedex, France
pierre.medrel@xlim.fr

***Abstract*—This paper focuses on the time domain envelope measurements based analysis of power amplifiers in order to improve both linearity and efficiency of microwave transmitters. First of all, a versatile time domain envelope test bench is presented. Then, two applications related to those RF PA measurements are reported. The first application concerns linearity characterization that can be specified in term of Noise Power Ratio (NPR) and Error Vector Magnitude (EVM). Those figures of merit are essential to compute the final bit error rate in a system level simulation tool. A relationship between NPR and EVM is presented and validated by measurements. As a result it can be advantageously used to simplify simulation and measurement procedures for the linearity characterisation of devices and subsystems. The second application is regarding enhancement of the trade-off between linearity and energy efficiency. In order to have a good efficiency, a 10 W class-B GaN Power amplifier is considered. The work presented here, proposes a solution for linearity specifications at large output power back-off thanks to a dynamic gate bias control related to low instantaneous envelope power level. Meanwhile, a dynamic drain bias control handles good efficiency at a constant gain for high instantaneous envelope power level. The measurement-based gate and drain bias trajectory extraction will be fully detailed and take into account GaN dispersive effects such as thermal and trapping effects.**

***Index Terms*—Instrumentation, NPR, EVM, nonlinear circuits, power amplifiers, dynamic bias, envelope tracking, linearity, Class-B.**

I. Introduction

During the last years, most designs of RF transmitter/receivers were no longer based on CW characteristics only. The large spectrum widening increases considerably the need for dynamic modulations analysis and characterization of RF power amplifiers. In term of instrumentation, Vectorial Signal Analyzer (VSA) has become a major tool for RF characterizations of power amplifiers in order to extract system level criteria for linearity and efficiency. This paper presents a calibrated VSA-based setup to measure RF time-domain envelopes at the input and output of RF power amplifiers under test. Two kinds of applications are presented. The first one, is related to the linearity criterion for a multi-carrier driven power amplifier : the noise power ratio. This ratio can be measured thanks to an Error-Vector-Magnitude (EVM) measurement and does not require the acquisition of the whole spectrum. The second application concerns the validation of envelope tracking power amplifier demonstrator. A class-B power amplifier, opitimized in term of linearity thanks to a dynamic bias voltage technique applied to both the gate and the drain bias ports is described.

II. Time-domain RF baseband measurement setup

The RF time-domain envelope measurement setup is depicted on figures 1 and 2. This bench is combining a generation/emission block and a reception/analyzing block.

The generation/emission block is dedicated to the shaping of the modulated signals expected to drive the power amplifier under test. It is basically composed of a computer and a RF generator (SMU-200A by Rohde & Schwarz) and a linear 50dB gain amplifier used to feed the RF signal into the PA under test with an appropriate power level.

The receiver block focuses on the calibrated measurements of the signals at reference planes where the power amplifier under test is connected. The RF receiver is a vector signal analyzer (FSQ-8 Rohde & Schwarz), which demodulates the RF signal, and returns the IQ flows. Clock and 10MHz synchronization signals are provided by the SMU-200A. A hardware envelope trigger is used to synchronize signal generation and data acquisition. The input and output envelopes at the PA reference planes are collected sequentially through couplers with a switch, which requires input and output signals to be software post-synchronized and time aligned.

The RF path between the VSA and the reference planes are taken into acount thanks to S-parameters measurements of the test-set (couplers and cables connected to the VSA). The signal measured by the VSA is then de-embedded to the reference plane.

A 4-channels time-domain envelope measurement setup would enable the phase consistancy in the measurements waveform according to the simultaneous acquisition by all receivers [1]. Unfortunatly, as depicted on figures 1 and 2, the receiver has only one RF input. Thus, input $\tilde{x}(t)$ and output $\tilde{y}(t)$ complex envelope measurements are performed sequentially. We need to perform a time-domain alignment as explained in [2]. This time-domain alignment between input and output signals is based on a correlation method detailed in [3]. When the DUT is removed and replaced by a direct connection, we can establish the relation between $\tilde{x}(t)$ and $\tilde{y}(t)$ as :

$$\tilde{y}(t) = \tilde{x}(t-\tau).e^{-j.\phi} \tag{1}$$

The calculation of the crosscorrelation function $\Gamma_{\tilde{y}\tilde{x}}(t)$, in the frequency domain, leads us to :

$$FFT\left\{\Gamma_{\tilde{y}\tilde{x}}(t)\right\} = \left\|\tilde{X}(f)\right\|^2 .e^{j.(2\pi.f.\tau+\phi)} \tag{2}$$

Then the group delay τ of the DUT (i.e. the complex envelop delay) and the phase of the RF carrier frequency ϕ can be

978-1-4673-5535-313/$31.00 ©2013 IEEE

extracted from a linear regression according to :

$$Arg\left\{FFT\left\{\Gamma_{\tilde{y}\tilde{x}}(t)\right\}\right\} = 2\pi.f.\tau + \phi \quad (3)$$

In this paper, all signals measured at the input $\tilde{x}(t)$ and the output $\tilde{y}(t)$ are time-domain aligned and phase corrected thanks to the crosscorrelation method applied with the ideal signal (the IQ data generated with the computer) such as $\tilde{X}(f) = \tilde{X}_{meas}(f).e^{j.(2\pi.f\tau+\phi)}$.

A. Bench for Noise Power Ratio measurements

This setup (figure 1) is related to section III which demonstrates the capability of a commercially available EVM equipment to measure NPR as expected by theoretical analysis and simulations in [4]. For this analysis, the SMU-200A is used

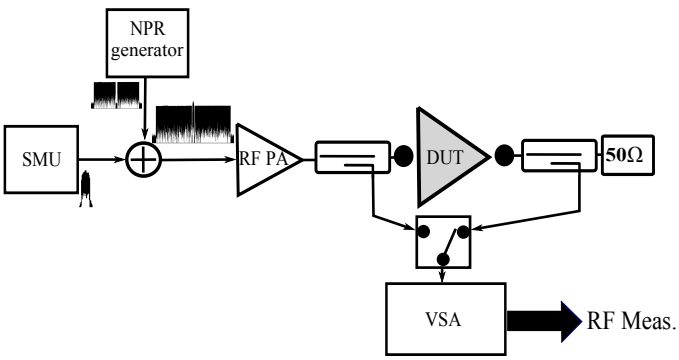

Fig. 1. Test set-up built for the experimental measurement of NPR with an EVM analyzer.

to supply a digitally modulated signal (a filtered 16-QAM). An auxiliary generator (a Rhode & Schwarz SMBV-100A) is used to generate a notched NPR signal. For that purpose, these two signals are combined through a resistive 3-dB coupler and the resulting signal is linearly amplified to drive the input of the power amplifier under test. The filtered 16-QAM signal spectrum is inserted within the notched bandwidth of the NPR Signal stimulus and is used as a noise probe for NPR calculation. In this paper, the VSA is used both for spectrum measurement and for EVM measurement in order to compare NPR calculated from different methods, but it is possible to determine the NPR value only from EVM measurements. The NPR signal has to be generated but not necessary measured.

B. Bench setup for Envelope Tracking measurements

This setup (figure 2), related to section IV, is a versatile bench dedicated to envelope tracking power amplifier (ET PA) characterizations [5].

The test bench used here is similar to the previous one but includes two arbitrary waveform generators (AWG) to drive the bias ports of the power amplifier under test. Dynamic bias voltages and currents are aquired with a scope. The computer controlled set-up enables the tuning of time alignment between RF signal envelope and dynamic biasing signals. The alignment can be checked with a diode envelope detector connected to the scope. The computer is used to generate and upload IQ

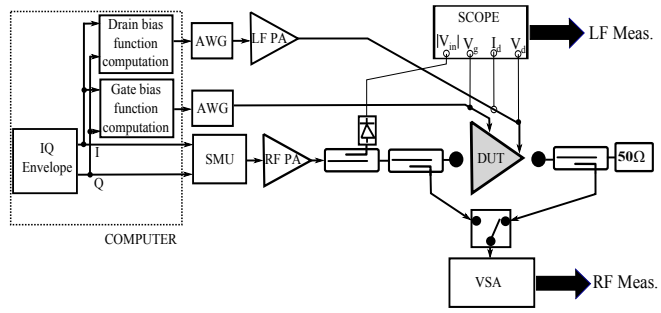

Fig. 2. Test bench used for gate and drain envelope tracking purposes.

flow into the RF generator, and to process base band signals loaded into arbitrary waveform generators (AWG) for drain and/or gate bias tracking purpose. A high current broadband amplifier (DC-5MHz) is used to amplify the drain bias signal.

III. Noise Power Ratio : the linearity criterion for multi-carrier behavior of power amplifiers

Noise power ratio (NPR) criterion is well suited for the analysis of linearity of power amplifiers driven by a multi-carrier signals [6]. NPR gives a better indication of the amount of intermodulation distortion as far as two-tone IM3 is not a communication signal and ACPR figure of merit is often considering only one modulated carrier. The knowledge of NPR value is of prime importance for the design of transponder used in satellite systems. This section will present three different ways to measure NPR at the output of a RF power amplifier. The first method is a RF spectrum measurement for which intermodulation product power is displayed thanks to a notch. The second method does not require a notch but needs the acquistion of both input and output fundamental complex envelopes in order to calculate an equivalent gain of the PA. The last method can be performed with a MER or EVM analyzer.

A. NPR spectral measurement : the notch method

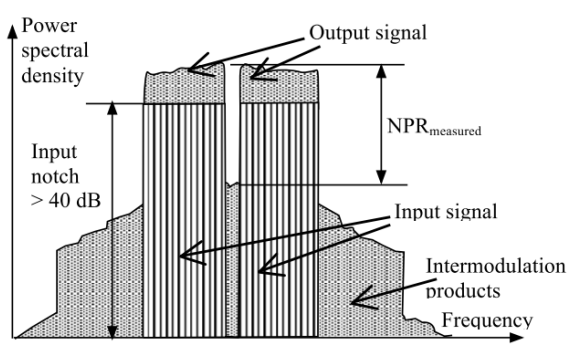

Fig. 3. NPR measurement using the notch method.

As far as a sum of several modulated signals can be modeled as Gaussian noise, the classical approach for NPR measurement is based on the generation of a band-limited

gaussian white noise including a notch impressed at the center frequency. The power amplifier nonlinearities generate intermodulation products partially filling the notch in terms of power spectrum as illustrated on figure 3. $NPR_{measured}$ is then defined as the ratio of the average output power within the notch (N) to the average output power outside the notch ($C+N$).

$$NPR_{measured} = \frac{C+N}{N} \tag{4}$$

The true NPR is then equal to :

$$NPR = \frac{C}{N} = NPR_{measured} - 1 \tag{5}$$

where NPR and $NPR_{measured}$ are linear power quantities.

B. NPR envelope measurement : the equivalent gain method

If NPR signal is digitally generated, one have to take into account a trade-off : on one hand the ratio of the notch bandwidth has to be as small as possible but should include at least 100 intermodulation tones in order to minimize the variance of the in-notch average power [7]. This spectrum-based measurement technique only involves the output spectrum but requires the generation of very large number of tones as presented in [8] and [9]. An alternative method, which requires both input and output RF complex envelopes, consists in measuring the NPR from a notch-less signal. This method introduced by [10] and already used with multitone SSPA designs [7] may be measured with a VSA based measurement setup such as the one described in the first section. This method, the equivalent gain approach, assumes that the power amplifier exhibits a memoryless non-linearity f_{NL} such as :

$$\tilde{y}(t) = f_{NL}\left(\tilde{x}(t)\right) \tag{6}$$

where $\tilde{x}$ and $\tilde{y}$ are the measured complex envelopes around the fundamental frequency at the input and output of the power amplifier, respectively.

According to $\tilde{x}$ is a zero-mean stationary Gaussian random signal, one can apply the Bussgang theorem [11] extended to the complex case, to include phase as well as amplitude nonlinearities [12], to define the equivalent gain λ such as :

$$\tilde{y}(t) = \lambda.\tilde{x}(t) + \tilde{n}(t) \tag{7}$$

where the output signal $\tilde{y}(t)$ is represented as a sum of an undistorted component $\lambda.\tilde{x}(t)$ and the intermodulation noise $\tilde{n}(t)$ generated by the nonlinearity. The equivalent gain λ can be calculated from input/output measured complex envelopes as :

$$\lambda = \frac{R_{\tilde{x}\tilde{y}}}{R_{\tilde{x}\tilde{x}}} = \frac{E\left[\tilde{y}(t)\tilde{x}^*(t)\right]}{E\left[\tilde{x}(t)\tilde{x}^*(t)\right]} \tag{8}$$

The NPR is a carrier-to-noise ratio measurement that can be expressed thanks to the equivalent gain :

$$NPR = \frac{C}{N} = \frac{E\left[\left(\tilde{y}(t) - \tilde{n}(t)\right)\left(\tilde{y}(t) - \tilde{n}(t)\right)^*\right]}{E\left[\tilde{n}(t)\tilde{n}^*(t)\right]} \tag{9}$$

with

$$\tilde{n}(t) = \tilde{y}(t) - \lambda.\tilde{x}(t) \tag{10}$$

This ratio is consistant with the notch method for NPR measurements when the calculation is done only in a limited frequency bandwidth of interrest Δ around the center frequency:

$$NPR|_{dB} = 10\log_{10}\left(\frac{\sum\limits_{f_i \in \Delta} \left\|\lambda.X\left(f_i\right)\right\|^2}{\sum\limits_{f_i \in \Delta} \left\|Y\left(f_i\right) - \lambda.X\left(f_i\right)\right\|^2}\right) \tag{11}$$

C. Measuring NPR with an EVM analyzer

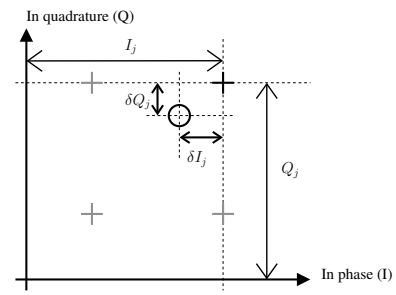

Fig. 4. Top right quarter IQ quadrant for a 16-QAM modulation. For a given symbol j, ideal (cross) and actual (circle) locations define I_j, Q_j, δI_j and δQ_j in volts.

Single tone digital modulations are mainly tested according to two criteria : the error vector magnitude (EVM) and the modulation error ratio (MER) defined according to the contellation of the IQ voltage data as following voltage ratio [13] :

$$MER = \sqrt{\frac{\sum\limits_{j=1}^{N}\left(I_j^2 + Q_j^2\right)}{\sum\limits_{j=1}^{N}\left(\delta I_j^2 + \delta Q_j^2\right)}} \tag{12}$$

$$EVM = \sqrt{\frac{\frac{1}{N}\sum\limits_{j=1}^{N}\left(\delta I_j^2 + \delta Q_j^2\right)}{V_{max}^2}} \tag{13}$$

where V_{max} is the magnitude of the vector to the outermost state of the constellation. The in-band carrier-to-noise power ratio can be expressed as :

$$\frac{C}{N} = MER^2 = \left(\frac{1}{EVM \times V}\right)^2 \tag{14}$$

where $V = \frac{V_{max}}{V_{rms}}$ is the voltage peak-to-mean ratio of the ideal constellation. Some values of this ratio are given on Table I

The main test signal for NPR measurement is a band-limited white gaussian noise with a notch of less than 5% of the total bandwidth located at the center of the bandwidth.

TABLE I
PEAK-TO-MEAN RATIOS FOR CONTELLATION SIZES

Modulation format	V
BPSK	1
QPSK	1
16-QAM	1.341
32-QAM	1.303
64-QAM	1.527

The main test signal for EVM measurement is a carrier with digital modulation of either phase (PSK) or two-dimension amplitude (QAM) or amplitude and phase (APSK). EVM can be measured on a single carrier driving the non-linear amplifier or on one test carrier in a multiplex of many carriers. The other modulated carriers in the multiplex can be replaced by white Gaussian noise. The measurement of EVM is then performed on the modulated carrier inside the notch in the center of the white Gaussian noise bandwidth

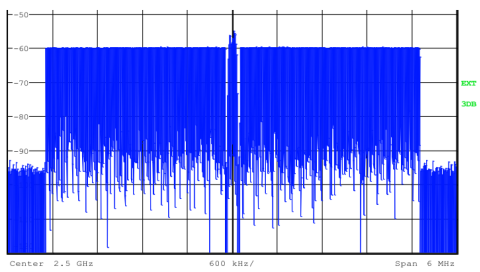

Fig. 5. Signal composed of notched white Gaussian noise and test carrier with digital modulation inside the notch.

Figure 5 illustrates the spectrum of the signal used for NPR characterization from EVM measurements. In the work reported here, the white gaussian noise is 5 MHz bandwidth with a 5% notch at the center frequency. A filtered (roll-off=0.35) 200 ksymbol/s 16-QAM has been added at the center frequency as illustrated in figure 1. This modulation is used as a NPR probe. The EVM measured from this modulation will be related to the global NPR as far as the power density of the digital modulation is the same than the white noise. NPR in dB is then :

$$NPR|_{dB} = 20\log_{10}(EVM \times V) - 10\log_{10}(R) \qquad (15)$$

where R is the ratio of white noise power density (outside the notch) to modulated tone power density located within the notch. It is better to set R close to 1 in order to minimize the disturbance produced by the modulation into the NPR signal. Figure 6 presents NPR measurements performed both with the notch method and with the EVM method. Measurements of NPR and EVM show good agreement when performed in the same conditions. The great advantage of this method is that the white noise does not need to be measured.

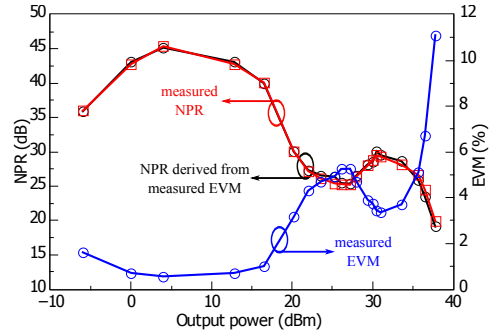

Fig. 6. Measured NPR, measured EVM and NPR derived from measured EVM for a Cree CGH40010 GaN HEMT amplifier at Freq=3.2 GHz, Vds0=28V, Idsq=200 mA, Vgs0=3.1 volts.

IV. LINEARITY AND EFFICIENCY IMPROVEMENT OF RF POWER AMPLIFIERS

The second application reported here concerns an experimental study of combined dynamic gate and drain biasing for high efficiency and linear power amplifier. This technique is applied here to a class-B 10W GaN power amplifier at S-band.

The PA under test is a commercially available test board CGH27015-TB from CREE. The purpose of this study is to demonstrate the benefit to apply a dynamic gate bias control at low instantantaneous envelope power levels of the RF input modulated signal [14], while a dynamic drain bias control is applied at medium and high instantantaneous envelope power levels.

The test bench has been already presented in section II and figure 2. An important aspect of this work concerns the characterization of the dynamic behaviour of GaN devices for the gate and drain bias trajectory extraction. A time domain envelope measurement system is necessary to take into account dispersive effects such as trapping and self heating effects [15]. The proposed technique has been applied to the amplification of a 16-QAM modulated signal at 2.5 GHz. The figure 7 illustrates the purpose of handling : a dynamic gate bias control is applied at low input power (below P_{th2}) to obtain a constant power gain. This approach requires to pull the gate voltage a little above the pinch-off point for any input power level below P_{th2}. During the dynamic gate bias control, the drain bias voltage is kept constant to its minimal value of 15V. For input power levels above the threshold P_{th2}, the gate bias voltage is kept constant at the pinch-off value (-3V) and a variable drain bias voltage is applied.

Althought a quasi-static characterization of the PA is necessary to identify the bias strategy, a dynamic characterization of the PA is compulsory for an accurate extraction of appropriate gate and drain bias trajectories taking into account the dispersive effects. In a first step, dynamic AM/AM characteristics between PA output signal and base band signal are measured for a 1MSymb/s 16-QAM modulated signal. During this first step, the gate bias of the PA is fixed at the pinch-off value ($V_{GS0} = -3V$) and measurements are performed at different DC drain bias values varying from 15V

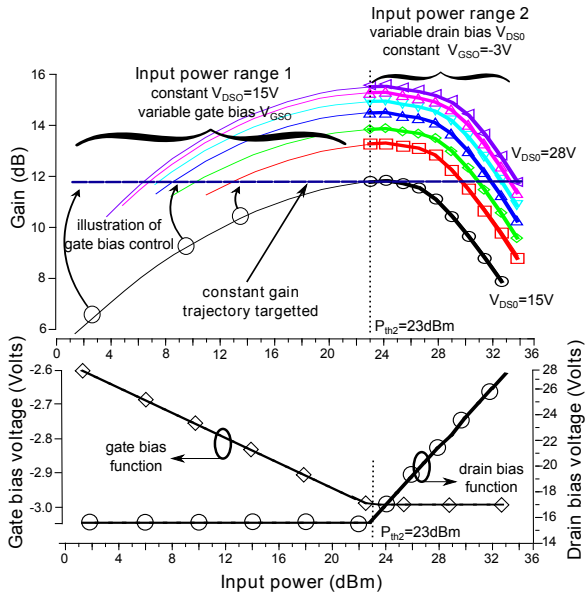

Fig. 7. Principle of the proposed method to target a constant gain trajectory for a class-B PA (up), and representation of drain and gate bias functions (down).

up to 28V . Measurement results are plotted in figure 8.

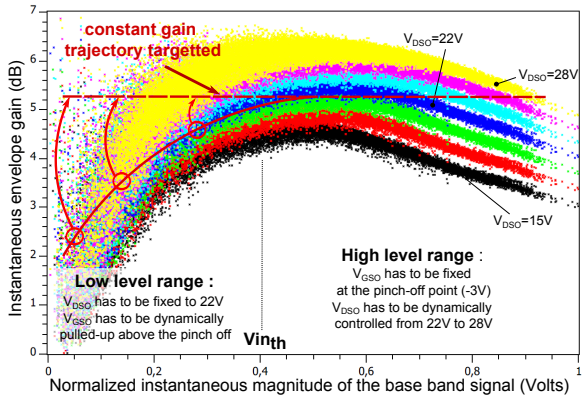

Fig. 8. Extraction of the drain and gate bias functions from dynamic AM/AM measurements.

A corresponding threshold of the input envelope Vin_{th} is identified as indicated in figure 8. For instantaneous envelope levels smaller than Vin_{th} a dynamic gate bias control must be applied. It consists in weakly pulling the gate bias voltage a little above the pinch-off value until the instantaneous envelope gain characteristic becomes constant versus input power at low level. Above the threshold value Vin_{th}, the gate bias voltage is maintained at a fixed value of -3V (class-B operation) and the drain bias voltage is varied over the 22V - 28V range as a function of input instantaneous envelope variations. In a last step, time alignment between input envelope and gate and drain biasing signals is performed to ensure optimal operation of the transistor.

One of the main interest of this characterization tool, is that it provides visual criteria for the extraction and the tuning of drain and gate bias functions. An important criterion used during successive experiments is the dynamic AM/AM characteristic flatness.

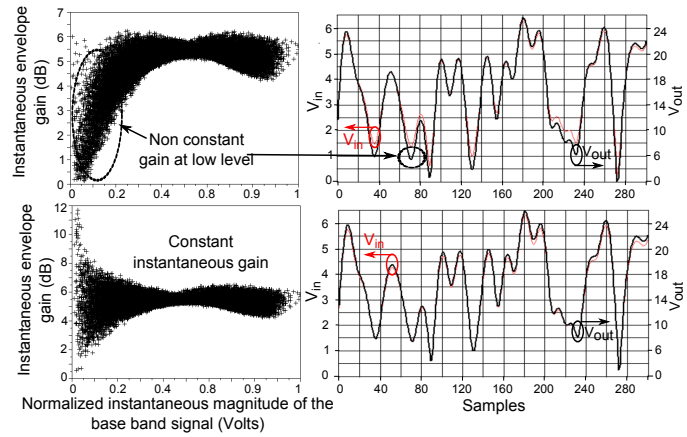

Fig. 9. Dynamic AM/AM between PA output signal and base band signal (left). Corresponding magnitudes of RF signal envelopes at the PA under test input and output reference planes (right). PA is in class-B operation with only the dynamic drain bias control applied (up) and with both drain and gate dynamic biases (down).

Figure 9 (up) shows dynamic AM/AM obtained when the PA is biased at the pinch-off point and when only a dynamic drain bias is applied (22V<V_{DSO}<28V). The corresponding magnitude of input and output RF signal envelope waveforms clearly indicates a non-linear behavior of the PA under test at low level. Optimized dynamic AM/AM profile is shown in figure 9 (down) when both dynamic gate and drain signals are applied and tuned. AM/PM conversion remains low (below 5 degrees) for this amplifier under test. The corresponding drain and gate bias trajectories extracted from dynamic AM/AM measurements are presented in figure 10.

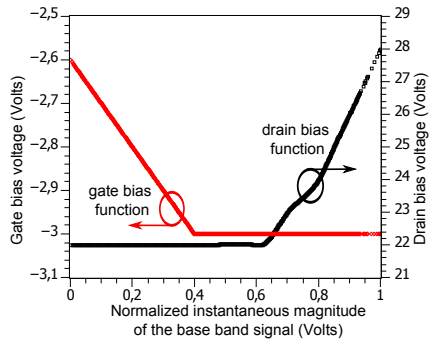

Fig. 10. Drain and gate bias functions extracted from dynamic AM/AM measurements.

Time domain waveforms of the input RF signal envelope band dynamic gate and drain bias voltages are shown in figure 11.

In figure 12, power added efficiency and EVM measurement results are shown for two different cases. A first measurement is performed when the PA is biased in class-B mode (I_{DS0} =

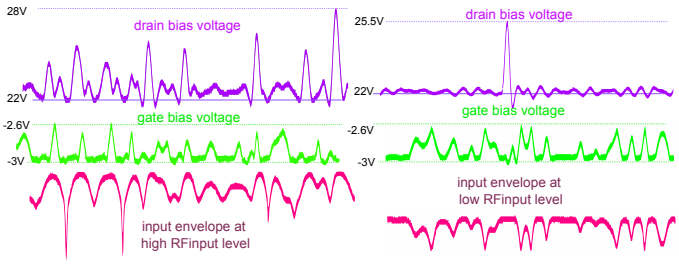

Fig. 11. Time domain waveforms at 37dBm output power level (left) and at 33dBm output power (right).

0mA) with a fixed drain voltage of 28V. A second measurement is done when dynamic gate and drain bias are applied. Significant improvement of EVM is obtained at backed-off power while ensuring efficiency enhancement.

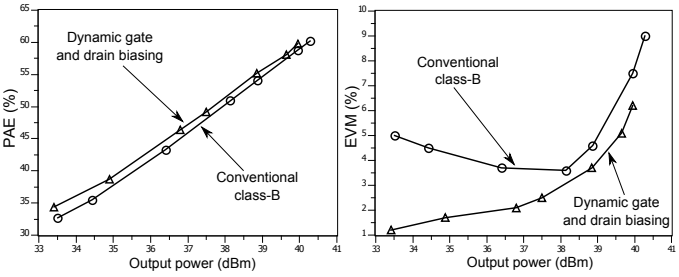

Fig. 12. PAE (left) and EVM (right) measurements versus output power.

V. Conclusion

This work has presented an experimental test bench that is expected to be a usefull tool for the characterization of power amplifier driven by multi-carrier stimuli. Two different applications have been carried out.

In the first one, a relationship between two system metrics has been experimentally demonstrated. We prove that EVM can be used as a baseband figure of merit to access the multicarrier NPR. A digitally modulated carrier is used as a noise probe to derive the NPR from EVM. The mutlicarrier behavior is emulated by a digital generation of multisine with random phases. It is important to note that, in this approach, the notched wide-band gaussian noise signal does no longer have to be measured to compute the NPR. The main benefit is that one can predict the multicarrier behavior of a PA, even if it is driven by broadband stimuli, by measuring the in-band distorsions, with a simple commercial high resolution and narrow-band IQ demodulator.

In the second one, we have focused on a dispersive-consciousness approach to precisely build an envelope tracking PA architecture. Several points have been discussed in our study, and have been taken into account, such as dynamic AM-AM and AM-PM transfer characteristics, when the PA is driven by the useful signal. The test bench allows us to precisely tune the drain and gate bias signals in real time by using instantaneous EVM measurements.

The ultimate goal that can be achieved is the comparison of several configurations in term of multiple optimization constraints such as DC-consumption, energy-per-bit transmitted, optimum receiver CNR, in order to reach the optimum operating point of power amplifiers according to system level specifications.

Acknowledgment

The authors would like to thank the french space agency CNES and Thales Alenia Space for their financial supports.

References

[1] F. Macraigne, T. Reveyrand, G. Neveux, D. Barataud, J.-M. Nébus, A. Soury, and E. NGoya, "Time-domain envelope measurements for characterization and behavioral modeling of nonlinear devices with memory," *IEEE Transactions on Microwave Theory and Techniques*, vol. 54, no. 8, pp. 3219–3226, Aug. 2006.

[2] G. Nanfack Nkondem, J. Santiago, G. Neveux, D. Barataud, J.-M. Collantes, J. Portilla, J.-M. Nébus, and A. Mallet, "Characterization of Galileo signal correlation losses caused by non linear power amplification with memory," in *IEEE MTT-S International Microwave Symposium Digest*, 2008, pp. 1581–1584.

[3] M. Weiß, "Measuring the Dynamic Characteristic of High-Frequency Amplifiers with Real Signals," in *European Wireless*, Dresden, Germany, 2000, pp. 67–71.

[4] J. Sombrin, "On the formal identity of EVM and NPR measurement methods: Conditions for identity of error vector magnitude and noise power ratio," in *European Microwave Conference (EuMC)*, Manchester, UK, 2011, pp. 337–340.

[5] M. Saad El Dine, T. Reveyrand, G. Neveux, P. Bouysse, D. Barataud, J.-M. Nébus, and W. Rebernak, "A measurement Set-up and methodology combining dynamic biasing and baseband predistorsion for high efficiency and linear amplifier design," in *IEEE MTT-S International Microwave Symposium Digest*, 2010, pp. 1070–1073.

[6] R. Westcott, "Investigation of multiple f.m./f.d.m. carriers through a satellite t.w.t. operating near to saturation," *Proceedings of the Institution of Electrical Engineers*, vol. 114, no. 6, p. 726, 1967.

[7] J. Lajoinie, E. Ngoya, D. Barataud, J.-M. Nébus, J. Sombrin, and B. Rivierre, "Efficient simulation of NPR for the optimum design of satellite transponders SSPAs," in *IEEE MTT-S International Microwave Symposium Digest*, 1998, pp. 741–744.

[8] T. Reveyrand, D. Barataud, J. Lajoinie, M. Campovecchio, J.-M. Nébus, E. Ngoya, J. Sombrin, and D. Roques, "A Novel Experimental Noise Power Ratio Characterization Method for Multicarrier Microwave Power Amplifiers," in *55th ARFTG Conference Digest*, 2000, pp. 22–26.

[9] A. Mallet, F. Gizard, T. Reveyrand, L. Lapierre, and J. Sombrin, "A new satellite repeater amplifier characterization system for large bandwidth NPR and modulated signals measurements," in *IEEE MTT-S International Microwave Symposium Digest*, vol. 3, pp. 2245–2248.

[10] S.-W. Chen, W. Panton, and R. Gilmore, "Effects of nonlinear distortion on CDMA communication systems," *IEEE Transactions on Microwave Theory and Techniques*, vol. 44, no. 12, pp. 2743–2750, 1996.

[11] J. J. Bussgang, "Crosscorrelation functions of amplitude-distorted gaussian signals," Massachusetts Institute of Technology, Tech. Rep., 1952.

[12] J. Minkoff, "The Role of AM-to-PM Conversion in Memoryless Nonlinear Systems," *IEEE Transactions on Communications*, vol. 33, no. 2, pp. 139–144, 1985.

[13] ETSI, "Digital Video Broadcasting (DVB); Measurement guidelines for DVB systems," Tech. Rep., 2001.

[14] P. Medrel, A. Ramadan, J.-M. Nébus, P. Bouysse, L. Lapierre, and J.-F. Villemazet, "High efficiency class B GaN power amplifier with dynamic gate biasing for improved linearity," *Electronics Letters*, vol. 48, no. 18, pp. 1136–1137, Aug. 2012.

[15] R. Quéré, R. Sommet, P. Bouysse, T. Reveyrand, D. Barataud, J.-P. Teyssier, and J.-M. Nébus, "Low frequency parasitic effects in RF transistors and their impact on power amplifier performances," in *IEEE Wireless & Microwave Technology Conference (WAMICON)*, 2012, pp. 1–5.